UNCLASSIFIED

AD NUMBER

AD862053

NEW LIMITATION CHANGE

TO

Approved for public release, distribution unlimited

FROM

Distribution authorized to U.S. Gov't. agencies and their contractors; Administrative/Operational Use; SEP 1969. Other requests shall be referred to Air Force Rocket Propulsion Lab., Edwards AFB, CA.

AUTHORITY

AFRPL ltr, 29 Sep 1971

THIS PAGE IS UNCLASSIFIED

AFRPL-TR-69-213

AD 862053

EVALUATION OF A PLATFORM VERTICAL SINGLE-COMPONENT THRUST STAND

R K SYROME, LT, USAF

TECHNICAL REPORT AFRPL-TR-69-213

SEPTEMBER 1969

THIS DOCUMENT IS SUBJECT TO SPECIAL EXPORT CONTROLS AND EACH TRANSMITTAL TO FOREIGN GOVERNMENTS OR FOREIGN NATIONALS MAY BE MADE ONLY WITH PRIOR APPROVAL OF AFRPL (RPOR-STINFO), EDWARDS, CALIFORNIA 93523.

Reproduced by the
CLEARINGHOUSE
for Federal Scientific & Technical
Information Springfield Va. 22151

AIR FORCE ROCKET PROPULSION LABORATORY
AIR FORCE SYSTEMS COMMAND
UNITED STATES AIR FORCE
EDWARDS, CALIFORNIA

D D C
DEC 8 1969

AFRPL-TR-69-213

EVALUATION OF A PLATFORM VERTICAL SINGLE-COMPONENT THRUST STAND

R. K. Strome, Lt, USAF

This document is subject to special export controls and each transmittal to foreign governments or foreign nationals may be made only with approval of AFRPL (RPOR-STINFO), Edwards, California 93523.

NOTICES

When U. S. Government drawings, specifications, or other data are used for any purpose other than a definitely related Government procurement operation, the fact that the Government may have formulated, furnished, or in any way supplied the said drawings, specifications, or other data, is not to be regarded by implication or otherwise, or in any manner licensing the holder or any other person or corporation, or conveying any rights or permission to manufacture, use, or sell any patented invention that may in any way be related thereto.

ACCESSION for
CFSTI WHITE SECTION ☐
DDC BUFF SECTION ☑
UNANNOUNCED ☐
JUSTIFICATION .....
.....
BY .....
DISTRIBUTION/AVAILABILITY CODES
DIST. AVAIL. and/or SPECIAL
2

FOREWORD

This report was prepared by the Motor Component Development Branch, Solid Rocket Division, Air Force Rocket Propulsion Laboratory (AFRPL). The calibration of the thrust stand was conducted at the AFRPL under Project 305903AMG, Solid Rocket Hardware Design and Evaluation (SRHDE), during June 1969, with Lt John R. Ellison as Project Engineer. The calibration was monitored by Lt Richard K. Strome.

This report has been reviewed and approved.

CHARLES R. COOKE
Chief, Solid Rocket Division
Air Force Rocket Propulsion Laboratory

ABSTRACT

This report describes the calibration of a platform vertical six-component Rocketdyne Rocket Motor Thrust Stand located on Pad 2 Air Force Rocket Propulsion Laboratory, Solid Test Area (1-32). Six-component thrust measurement is possible, but presently the stand is used to measure only the axial component of thrust.

The thrust stand is accurate, with less than 0.3% error measured in the vertical direction. Two calibrations were performed. In the first, the calibration load cell was accurately placed on the thrust stand centerline. The second calibration was performed with the device offset about 2 inches to determine any effect on the accuracy of the measurements. When the calibrations were compared, it was determined that the offset calibration had no effect on the accuracy of the thrust stand.

TABLE OF CONTENTS

Section		Page
I	INTRODUCTION	1
II	THRUST STAND EVALUATION	2
	A. Thrust Stand Description	2
	B. Thrust Stand Calibration	2
	C. Thrust Stand Evaluation	3
III	SUMMARY	13
DISTRIBUTION		14
FORM 1473		20

ILLUSTRATIONS

Figure		Page
1	Platform Vertical Six-Component Thrust Stand	6
2	Conventional Vertical Six-Component Thrust Stand . .	7
3	Thrust Stand With Calibration Fixture	8

TABLES

Table		Page
I	Thrust Stand Evaluation, Run 1, Bridge A	9
II	Thrust Stand Evaluation, Run 1, Bridge B	10
III	Thrust Stand Evaluation, Run 2, Bridge A	11
IV	Thrust Stand Evaluation, Run 2, Bridge B	12

SECTION I

INTRODUCTION

A six-component thrust stand was designed by Rocketdyne, McGregor, Texas, to measure thrust and side force produced by solid rocket motors firing vertically upward. The thrust stand was obtained as residual hardware from a previous Rocketdyne contract by the Air Force Rocket Propulsion Laboratory for use with a high-chamber-pressure solid rocket test motor. Chamber pressures of 2000 psi and above produce thrust levels up to 12, 000 lbs with a nozzle throat diameter of approximately 2 inches. The weight of a loaded motor is about 12, 000 lbs. Since the nozzles currently being tested on this motor do not include Thrust Vector Control (TVC) Systems, only the vertical component of thrust is measured.

This thrust stand helps fulfill the testing requirements for the high-pressure motor. The accurate measurement of thrust is a basic requirement because the following parameters, essential in determining nozzle and motor efficiency, must be determined:

1. Combustion efficiency
2. Nozzle discharge coefficient
3. Throat area versus time
4. Total impulse
5. Propellant specific impulse

A conventional, in-place calibration was performed on the thrust stand with the aid of a calibration device. The data from this calibration was compared to an electrical calibration of the individual load cells, which was conducted in the Laboratory. The comparison between the two calibrations showed that they gave similar results.

SECTION II

THRUST STAND EVALUATION

A. THRUST STAND DESCRIPTION

The Rocketdyne thrust stand is a platform vertical six-component thrust stand (Figure 1). Three vertical force transducers form an accurately measured triangle for the axial component of thrust measurement. The three vertical load cells are connected to a triangular bridge platform. The three 10,000-pound-capacity load cells were manufactured by the Alinco Company. In the load cell electrical system, two sets of output data can be obtained by the use of two electrical bridges. These are denoted by bridges A and B. In the calibration, data is obtained from both the bridges. Connected to the triangular platform is a "basket" which supports the motor in the thrust stand. In contrast, a conventional six-component thrust stand incorporates a thrust spider and a single vertical load cell as shown in Figure 2. The conventional thrust stand provides for accurate measurement of side force when a TVC system is operating. The platform stand determines the side force, as does the conventional thrust stand, but it resolves more accurately the vertical component of thrust. Thus, the platform thrust stand can be used with the high-pressure motor, which requires that only the axial component of thrust be measured.

B. THRUST STAND CALIBRATION

The calibration was performed to correspond with the maximum motor weight and thrust produced by the high-pressure motor, which was about 24,000 pounds. The calibration equipment consisted of a highly accurate calibration load cell and electrical readout box installed in series with a two-way hydraulic ram. The object of the calibration was to apply a force of 24,000 pounds against the motor "basket" as shown in Figure 3. To accomplish this, a calibration fixture was fabricated. The fixture consisted of three I beams bolted to two flat plates at the center.

The I beams were welded to three large pipes which were used as legs. To apply a downward force to the thrust stand suggested that an upward force would be applied to the calibration fixture. Therefore, the legs were both welded and bolted to rails embedded in the test pad.

Calibration loads were applied in 20% steps from 0 to 24,000 pounds and back to 0 by the use of the hydraulic ram. The calibration load cell coupled to the electrical readout box was used to determine the different input loads. At each step (registered on a readout box and controlled manually by the hydraulic power supply) the force measured by the three load cells were simultaneously recorded by the digital data acquisition system. The "up" and "down" run was repeated three times to determine data reproducibility. The calibration was performed twice in its entirety. The first calibration was performed with the hydraulic ram and load cell centered as closely as possible on the thrust stand centerline. The second calibration was performed with the equipment offset about two inches to determine if this had an effect on the accuracy of the data. The offset data could not be distinguished from the centered data, which implied that the calibration equipment did not have to be accurately aligned on the thrust stand. Output data for bridges A and B were obtained.

C. THRUST STAND EVALUATION

An error analysis was performed on the data from the calibration of the Rocketdyne platform thrust stand. The 3-sigma error was determined with the help of a computer. The data is summarized in Tables I through IV and is described below.

Column 1	-	The data in column 1 are the forces applied using the hydraulic ram and calibration load cells.
Columns 2 3 and 4	-	The data in these columns are the computed forces derived from the tape recording made at the time of the test.
Column 5	-	The data in this column are the simple percent of point errors.
Column 6	-	The figures in this column are derived in the same manner as those in column 5, except that the difference is divided by the full scale value.

Accuracy of Primary Standard (PSD) - The primary standard is located at the Bureau of Naval Weapons, Pamoua, California. Documentation discloses that the error of the applied loads, used in calibrating the secondary standard or calibration load cell, did not exceed 0.01%. Thus, the accuracy of the primary standard is 99.99%.

Accuracy of Secondary Standard or Calibration Load Cell (SSD) - The secondary standard is a calibration load cell. The manufacturer guarantees an accuracy of 99.949% when calibrated by the primary standard.

Standard Deviation of Thrust Data Channel - This figure represents the error of the thrust stand load cells. Sigma is calculated from the following equation:

$$\sigma = \sqrt{\frac{Fd_1^2 + Fd_2^2 + Fd_3^2 + \ldots + Fd_{33}^2}{32}}$$

Fd denotes the difference between the force values in columns 2, 3, and 4 with column 1. Subscripts 1 through 33 represent the 33 individual differences.

The σ percent full-scale error is

$$\text{Precision} = 100 \frac{\sigma}{F_{FS}} = \text{Prec.}$$

where F_{fs} denotes the full-scale calibration force. Accuracy of the Thrust Data Channel - This is a single number which can be used to represent the entire system accuracy. It is related to the precision and also takes into account the uncertainty in the standards. The value is obtained in the following manner:

$$\%\ \text{Accuracy} = 100 - \text{error} = 100 - (9(\text{PSD})^2 + 9(\text{SSD})^2 + 9(\text{Prec})^2)^{\frac{1}{2}}$$

The nines that are used are a result of the 3-sigma errors.

A summary of the data is shown below

	3-σ Accuracy %	
	Bridge A	Bridge B
Run 1 (centered calibrator)	99.798	99.273
Run 2 (off-center calibrator)	99.809	99.313

The above data shows that the second calibration gave results almost exactly the same as the first. Also, Bridge A gave more accurate results.

SECTION III

SUMMARY

The evaluation of the data from the calibration of the Rocketdyne platform six-component thrust stand, Bridge A, gave excellent results. Over a 24,000-pound range in the vertical direction the accuracy was about 99.8%. A second calibration was performed with the calibration load cell offset about 2 inches from the thrust stand centerline. This data could not be distinguished from the first calibration. Bridge A was the most accurate of the two bridges and should be used for all future firings in the determination of thrust.

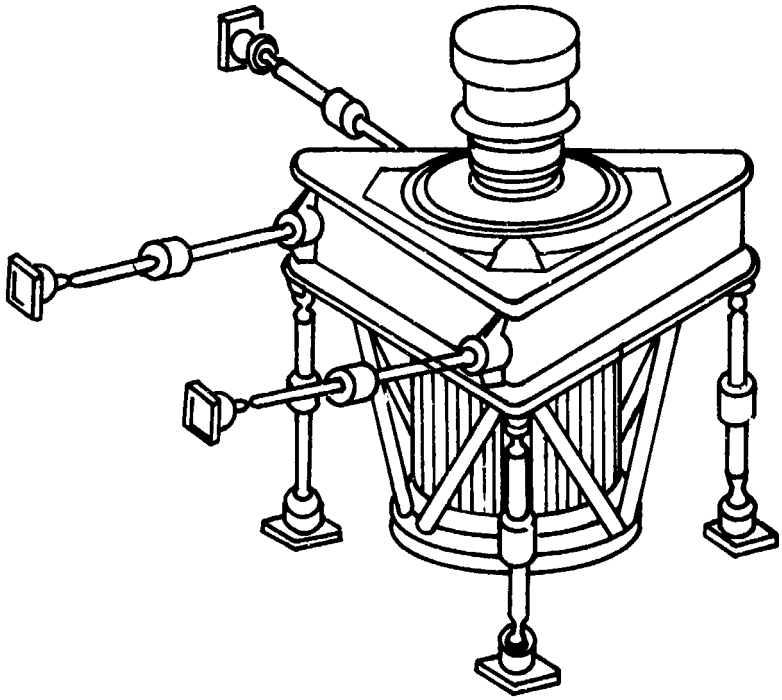

Figure 1. Platform Vertical Six-Component Thrust Stand

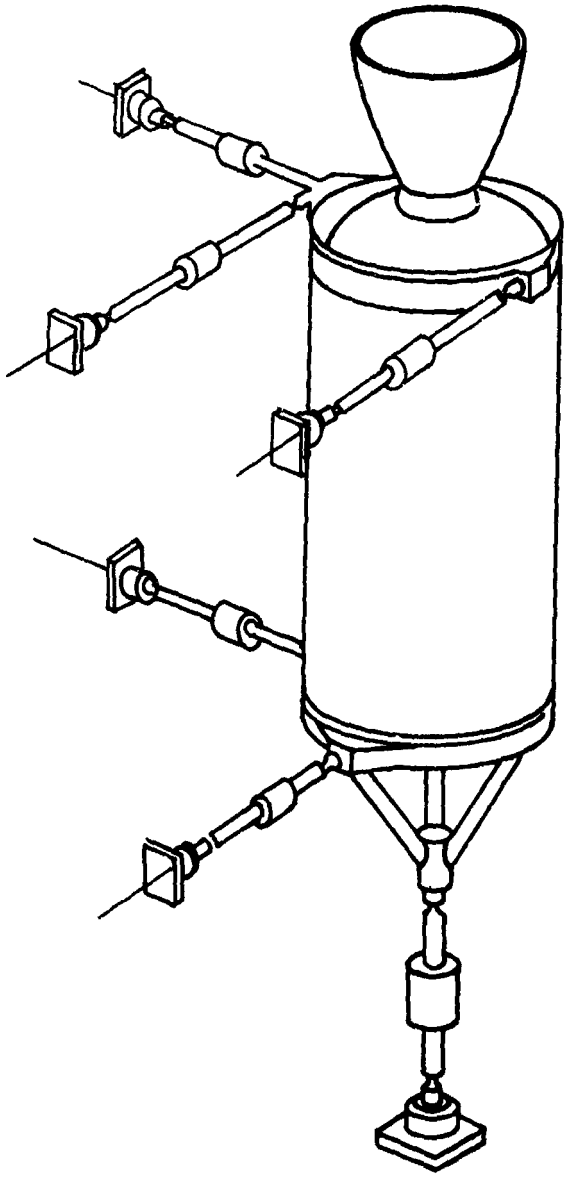

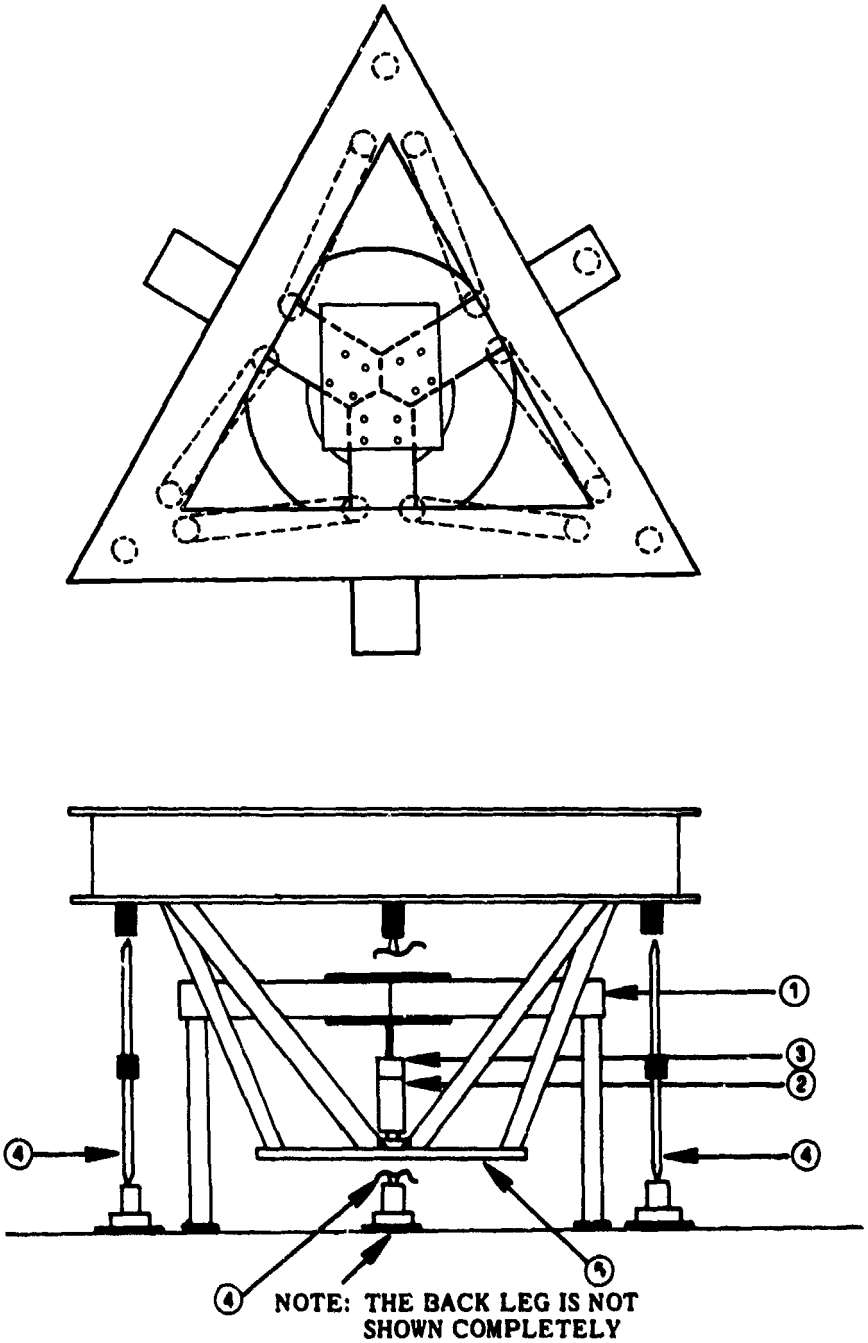

CODE:

1. CALIBRATION FIXTURE
2. CALIBRATION LOAD CELL
3. CALIBRATION HYDRAULIC RAM
4. THRUST STAND AXIAL LOAD CELLS
5. MOTOR "BASKET"

Figure 3. Thrust Stand With Calibration Fixture

TABLE I

TEST STAND EVALUATION - THRUST TRANSDUCERS, RUN 1, BRIDGE A

TEST STAND 1-32-2 TEST NO 1 5 MAY 69 HIPPO BRIDGE A
LOAD CELL MFG ALINCO MOD 35-233 SER NO 31217=F1 34606=F2 22437=F3

THRUST (lbs)		TEST INPUT (lbs)		PERCENT OF PT	PERCENT OF FS
1	2	3	4	5	6
0.00	0.109	0.097	-0.819	******	-0.00
4000.00	3984.503	3979.221	3978.252	-0.48	-0.08
8000.00	7983.332	7976.070	7977.273	-0.26	-0.09
12000.00	11975.629	11974.250	11972.258	-0.22	-0.11
16000.00	15976.778	15978.109	15986.253	-0.12	-0.08
20000.00	19983.832	19980.683	19990.150	-0.08	-0.06
24000.00	23995.117	23996.387	24001.838	+0.01	+0.01
20000.00	19985.446	19989.754	19992.899	-0.05	-0.04
16000.00	15984.141	15978.583	15987.604	-0.10	-0.07
12000.00	11984.551	11982.413	11981.262	-0.14	-0.07
8000.00	7988.346	7987.637	7986.344	-0.16	-0.05
4000.00	3994.729	3990.379	3990.815	-0.20	-0.03
0.00	0.710	0.416	1.960	******	0.00
			Ave	-0.16	-0.06

ACCURACY OF PRIMARY STANDARD = 99.9900 PERCENT.

ACCURACY OF SECONDARY STANDARD = 99.9490 PERCENT FOR 3 SIGMA.

CALIBRATION STEP VARIANCE - 0.744.

STANDARD DEVIATION OF THRUST DATA CHANNEL = 0.0653 PERCENT OF FULL SCALE.

ACCURACY OF THRUST DATA CHANNEL = 99.7976 PERCENT OF FULL SCALE FOR 3 SIGMA.

TABLE II

TEST STAND EVALUATION - THRUST TRANSDUCERS, RUN 1, BRIDGE B

TEST STAND 1-32-2 TEST NO 1 5 MAY 69 HIPPO BRIDGE B
LOAD CELL MFG ALINCO MOD 35-233 SER NO 31217=F1 34606=F2 22437=F3

THRUST (lbs)		TEST INPUT (lbs)		PERCENT OF PT	PERCENT OF FS
1	2	3	4	5	6
0.00	0.027	-5.011	-2.652	******	-0.01
4000.00	4003.657	3998.122	3997.763	-0.00	-0.00
8000.00	8022.260	8018.002	8015.296	0.23	0.08
12000.00	12034.698	12037.636	12030.396	0.29	0.14
16000.00	16053.801	16059.928	16066.965	0.38	0.25
20000.00	20082.300	20082.727	20090.417	0.43	0.35
24000.00	24119.816	24121.579	24121.618	0.50	0.50
20000.00	20082.607	20092.036	20092.404	0.45	0.37
16000.00	16065.551	16062.445	16072.161	0.42	0.28
12000.00	12046.707	12045.808	12043.838	0.38	0.19
8000.00	8029.161	8031.737	8026.567	0.36	0.12
4000.00	4013.561	4012.650	4010.897	0.31	0.05
0.00	-4.792	-2.352	-2.814	******	-0.01

ACCURACY OF PRIMARY STANDARD = 99.9900 PERCENT.

ACCURACY OF SECONDARY STANDARD = 99.9490 PERCENT FOR 3 SIGMA.

CALIBRATION STEP VARIANCE = 1.382

STANDARD DEVIATION OF THRUST DATA CHANNEL = 0.2417 PERCENT OF FULL SCALE.

ACCURACY OF THRUST DATA CHANNEL = 99.2732 PERCENT OF FULL SCALE FOR 3 SIGMA

TABLE III

TEST STAND EVALUATION - THRUST TRANSDUCERS, RUN 2, BRIDGE A

TEST STAND 1-32-2 TEST NO 2 5 MAY 69 HIPPO BRIDGE A
LOAD CELL MFG ALINCO MOD 35-233 SER NO 31217=F1 34606=F2 22437=F3

THRUST (lbs)	TEST INPUT (lbs)		PERCENT OF PT		PERCENT OF FS
1	2	3	4	5	6
0.00	0.933	0.302	-6.709	******	-0.01
4000.00	3986.105	3978.871	3981.011	-0.45	-0.08
8000.00	7982.374	7974.797	7978.549	-0.27	-0.09
12000.00	11979.425	11975.397	11980.564	-0.18	-0.09
16000.00	15988.619	15980.342	15992.368	-0.08	-0.05
20000.00	19991.244	19989.940	19997.898	-0.03	-0.03
24000.00	24011.456	24000.875	24014.685	+0.04	0.04
20000.00	19994.718	19990.630	20007.659	-0.01	-0.01
16000.00	15984.690	15984.571	16000.598	-0.06	-0.04
12000.00	11979.025	11975.724	11991.124	-0.15	-0.08
8000.00	7979.872	7982.659	7992.661	-0.19	-0.06
4000.00	3985.214	3981.859	3993.742	-0.33	-0.05
0.00	1.236	-10.442	2.982	******	-0.01

ACCURACY OF PRIMARY STANDARD = 99.9900 PERCENT.

ACCURACY OF SECONDARY STANDARD = 99.9490 PERCENT FOR 3 SIGMA.

CALIBRATION STEP VARIANCE = 0.687

STANDARD DEVIATION OF THRUST DATA CHANNEL = 0.0611 PERCENT OF FULL SCALE.

ACCURACY OF THRUST DATA CHANNEL = 99.8096 PERCENT OF FULL SCALE FOR 3 SIGMA.

TABLE IV

TEST STAND EVALUATION - THRUST TRANSDUCERS, RUN 2, BRIDGE B

TEST STAND 1-32-2 TEST NO 2 5 MAY 69 HIPPO BRIDGE B
LOAD CELL MFG ALINCO MOD 35-233 SER NO 31217=F1 34606=F2 22437=F3

THRUST (lbs)	TEST INPUT (lbs)		PERCENT OF PT	PERCENT OF FS
1	2	3	4	5	6
0.00	-0.493	-3.567	-18.518	******	-0.03
4000.00	4005.214	3992.992	3995.989	-0.05	-0.01
8000.00	8017.930	8008.314	8017.781	0.18	0.06
12000.00	12034.991	12027.377	12032.880	0.26	0.13
16000.00	16058.295	16050.672	16062.868	0.36	0.24
20000.00	20078.099	20076.438	20086.286	0.40	0.33
24000.00	24113.663	24105.641	24123.886	0.48	0.48
20000.00	20081.794	20080.485	20101.879	0.44	0.37
16000.00	16058.969	16054.927	16072.119	0.39	0.26
12000.00	12030.093	12029.684	12048.290	0.30	0.15
8000.00	8016.223	8013.749	8028.728	0.24	0.08
4000.00	4003.089	3998.360	4012.926	0.12	0.02
0.00	-0.450	-16.821	-3.163	******	-0.03

ACCURACY OF PRIMARY STANDARD = 99.9900 PERCENT.

ACCURACY OF SECONDARY STANDARD = 99.9490 PERCENT FOR 3 SIGMA.

CALIBRATION STEP VARIANCE = 0.672

STANDARD DEVIATION OF THRUST DATA CHANNEL = 0.2283 PERCENT OF FULL SCALE.

ACCURACY OF THRUST DATA CHANNEL = 99.3133 PERCENT OF FULL SCALE FOR 3 SIGMA.

Unclassified
Security Classification

DOCUMENT CONTROL DATA - R & D

(Security classification of title, body of abstract and indexing annotation must be entered when the overall report is classified)

1. ORIGINATING ACTIVITY *(Corporate author)* Air Force Rocket Propulsion Laboratory Edwards, California	2a. REPORT SECURITY CLASSIFICATION Unclassified 2b. GROUP N/A

3. REPORT TITLE

Evaluation of a Platform Vertical Single-Component Thrust System

4. DESCRIPTIVE NOTES *(Type of report and inclusive dates)*

Test Report June 1969

5. AUTHOR(S) *(First name, middle initial, last name)*

Richard K. Strome, Lt, USAF

6. REPORT DATE September 1969	7a. TOTAL NO. OF PAGES 20	7b. NO. OF REFS None
8a. CONTRACT OR GRANT NO. b. PROJECT NO. 305903AMG c. d.	9a. ORIGINATOR'S REPORT NUMBER(S) AFRPL-TR-69-213 9b. OTHER REPORT NO(S) *(Any other numbers that may be assigned this report)*	

10. DISTRIBUTION STATEMENT

This document is subject to special export controls and each transmittal to foreign governments or foreign nationals may be amde only with prior approval of AFRPL (ROPR-STINFO), Edwards, California 93523.

11. SUPPLEMENTARY NOTES	12. SPONSORING MILITARY ACTIVITY Air Force Rocket Propulsion Laboratory Air Force Systems Command, USAF Edwards, California

13. ABSTRACT

This report describes the calibration of a platform vertical 6-component Rocketdyne Rocket Motor Thrust Stand located on Pad 2, Air Force Rocket Propulsion Laboratory, Solid Test Area (1-32). Six-component thrust measurement is possible, but presently the stand is used to measure only the axial component of thrust.

The thrust stand is accurate, with less than 0.3% error measured in the vertical direction. Two calibrations were performed. In the first, the calibration load cell was accurately placed on the thrust stand, centerline. The second calibration was performed with the device offset about 2 inches to determine any effect on the accuracy of the measurements. When the calibrations were compared, it was determined that the offset calibration had no effect on the accuracy of the thrust stand.

DD FORM 1 NOV 65 1473

Unclassified
Security Classification

Unclassified
Security Classification

14. KEY WORDS	LINK A ROLE	LINK A WT	LINK B ROLE	LINK B WT	LINK C ROLE	LINK C WT
One-component thrust stand						
Calibration						